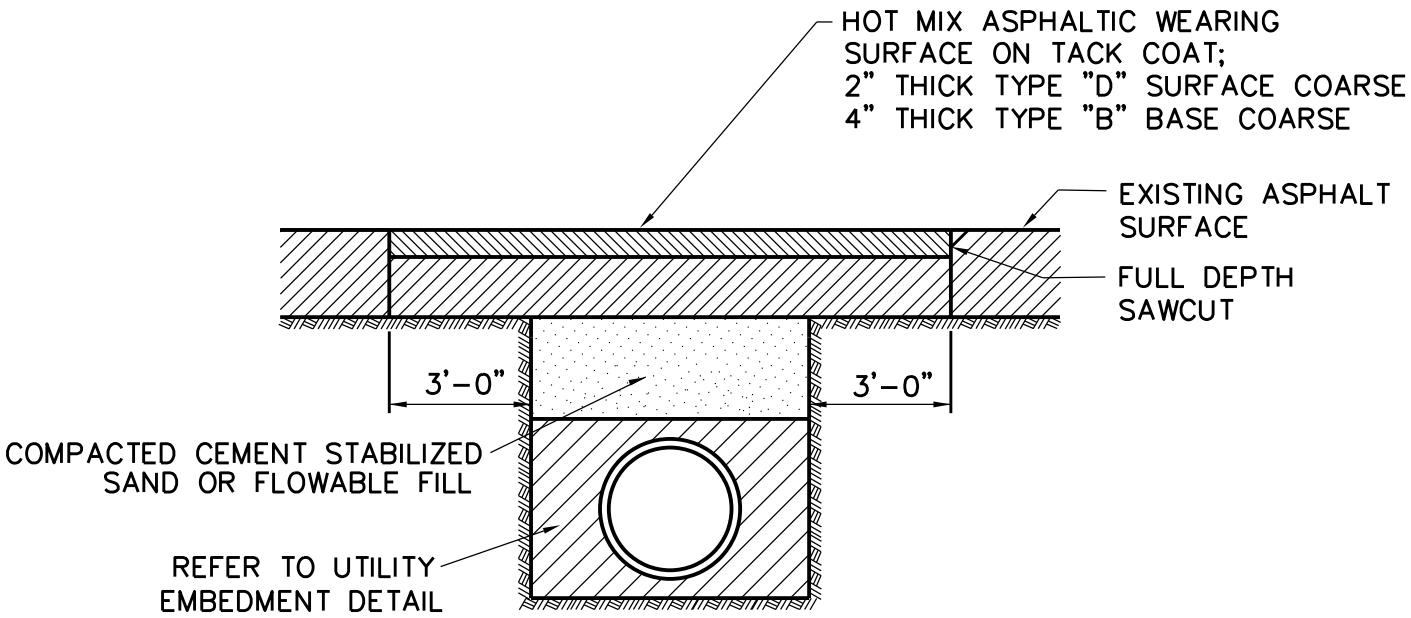

ASPHALT PAVEMENT

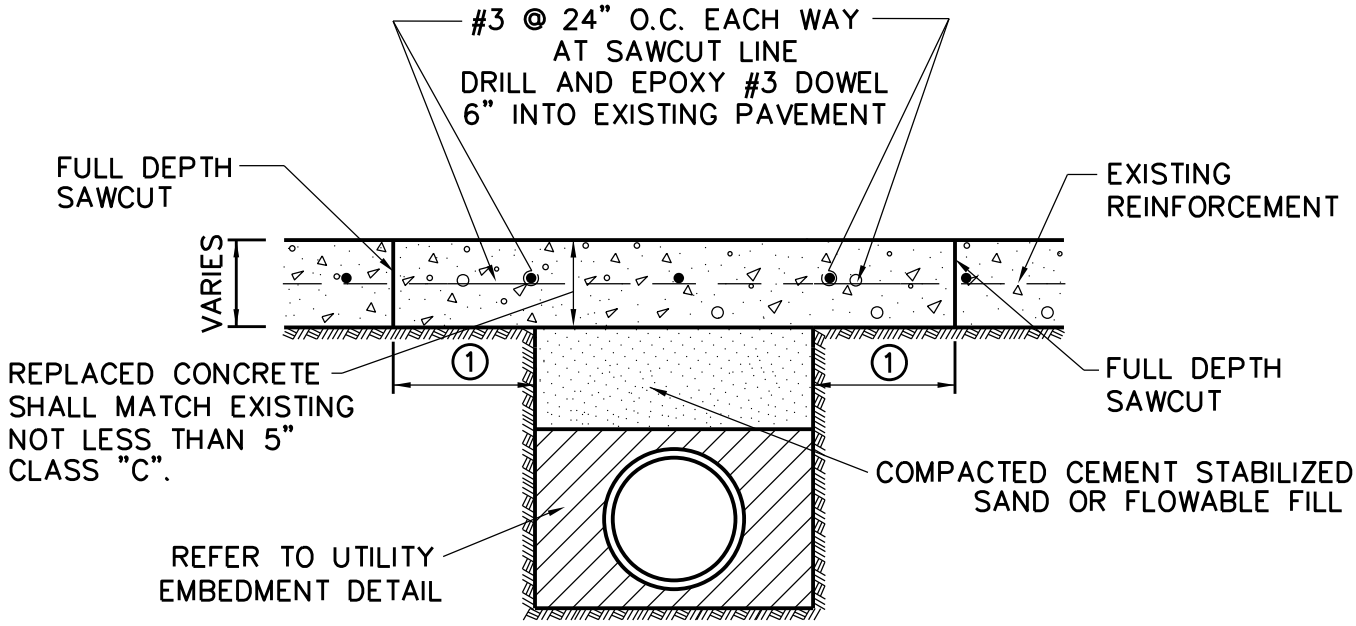

CONCRETE PAVEMENT

① MIN. 1'-0" OR MAX. 3'-0" UNLESS WITHIN 5' OF A CONTROL JOINT

1/1

Revision Date:

Scale : N/A Date : 06/01/05	GARLAND ENGINEERING STANDARD DETAILS	PAVEMENT REMOVAL AND REPLACEMENT FOR UTILITIES	PAGE 1
Design :			
Drawn : JMK			
Dwg. File : REM_001.DWG			
Project No. : STANDARD-DETAILS			

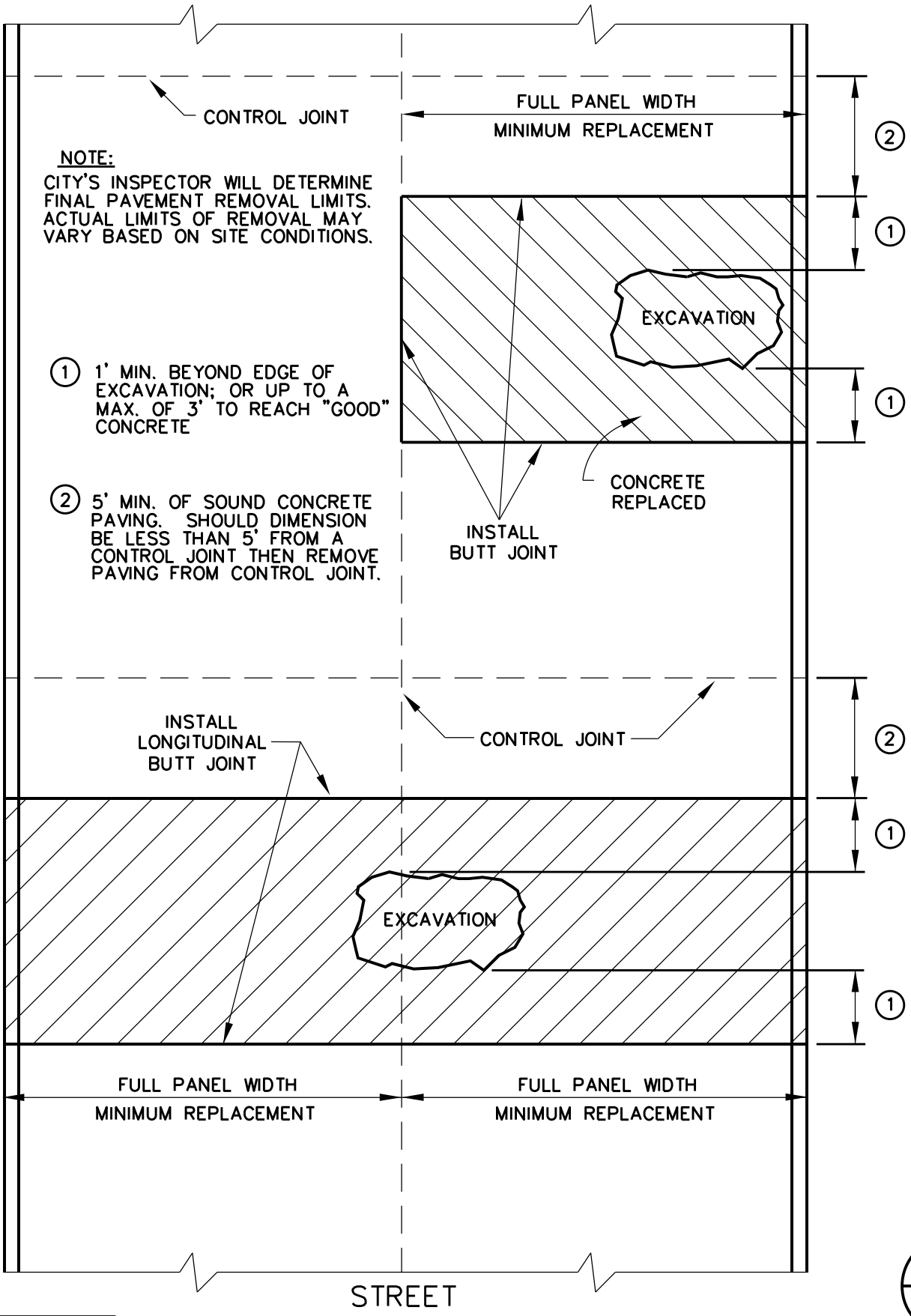

NOTE:
CITY'S INSPECTOR WILL DETERMINE FINAL PAVEMENT REMOVAL LIMITS. ACTUAL LIMITS OF REMOVAL MAY VARY BASED ON SITE CONDITIONS.

1 1' MIN. BEYOND EDGE OF EXCAVATION; OR UP TO A MAX. OF 3' TO REACH "GOOD" CONCRETE

2 5' MIN. OF SOUND CONCRETE PAVING. SHOULD DIMENSION BE LESS THAN 5' FROM A CONTROL JOINT THEN REMOVE PAVING FROM CONTROL JOINT.

1/1

Revision Date:

Scale : N/A	Date : 06/01/05	GARLAND ENGINEERING STANDARD DETAILS	TYPICAL CONCRETE STREET REMOVAL/REPLACEMENT
Design :			
Drawn : JMK			
Dwg. File : REM_002.DWG			
Project No. : STANDARD-DETAILS			

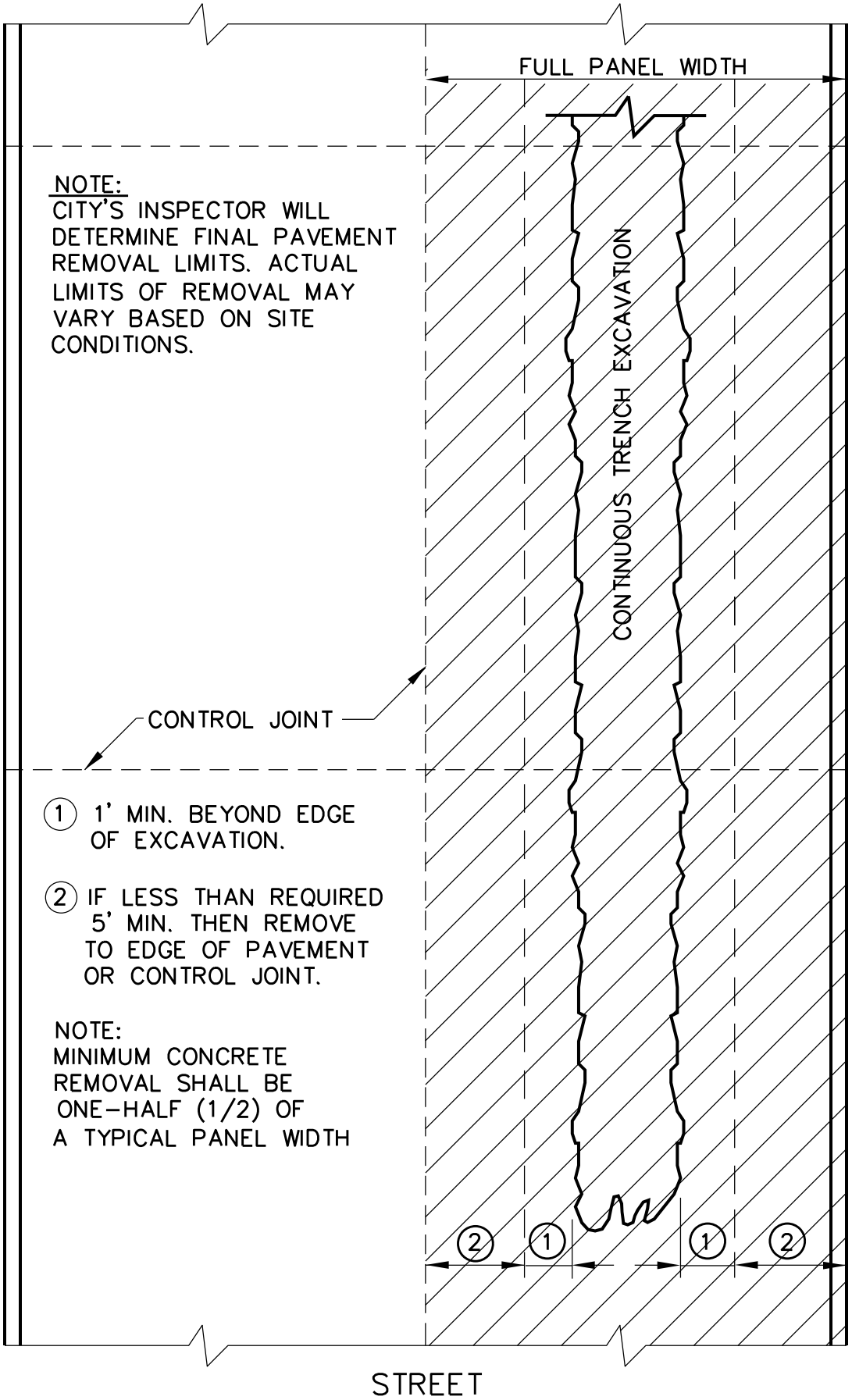

NOTE:
CITY'S INSPECTOR WILL DETERMINE FINAL PAVEMENT REMOVAL LIMITS. ACTUAL LIMITS OF REMOVAL MAY VARY BASED ON SITE CONDITIONS.

(1) 1' MIN. BEYOND EDGE OF EXCAVATION.

(2) IF LESS THAN REQUIRED 5' MIN. THEN REMOVE TO EDGE OF PAVEMENT OR CONTROL JOINT.

NOTE:
MINIMUM CONCRETE REMOVAL SHALL BE ONE-HALF (1/2) OF A TYPICAL PANEL WIDTH

1/1

Revision Date:

Scale : N/A Date : 06/01/05	GARLAND ENGINEERING STANDARD DETAILS	TYPICAL CONCRETE STREET REMOVAL/REPLACEMENT	PAGE 3
Design :			
Drawn : JMK			
Dwg. File : REM_003.DWG			
Project No. : STANDARD-DETAILS			

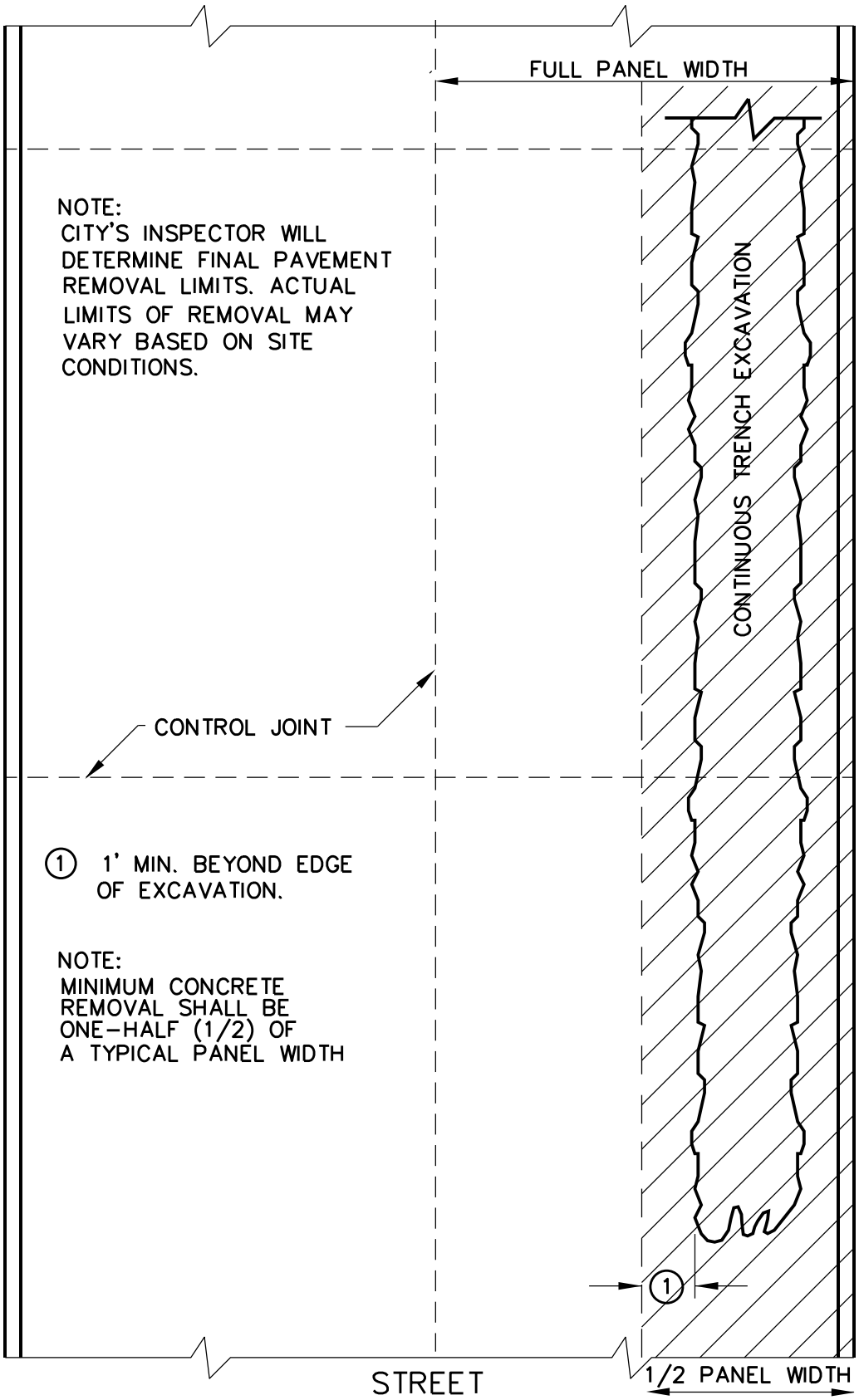

NOTE:
CITY'S INSPECTOR WILL DETERMINE FINAL PAVEMENT REMOVAL LIMITS. ACTUAL LIMITS OF REMOVAL MAY VARY BASED ON SITE CONDITIONS.

(1) 1' MIN. BEYOND EDGE OF EXCAVATION.

NOTE:
MINIMUM CONCRETE REMOVAL SHALL BE ONE-HALF (1/2) OF A TYPICAL PANEL WIDTH

1/1

Revision Date:

Scale : N/A Date : 06/01/05	GARLAND ENGINEERING STANDARD DETAILS	TYPICAL CONCRETE STREET REMOVAL/REPLACEMENT
Design :		
Drawn : JMK		
Dwg. File : REM_004.DWG		
Project No. : STANDARD-DETAILS		

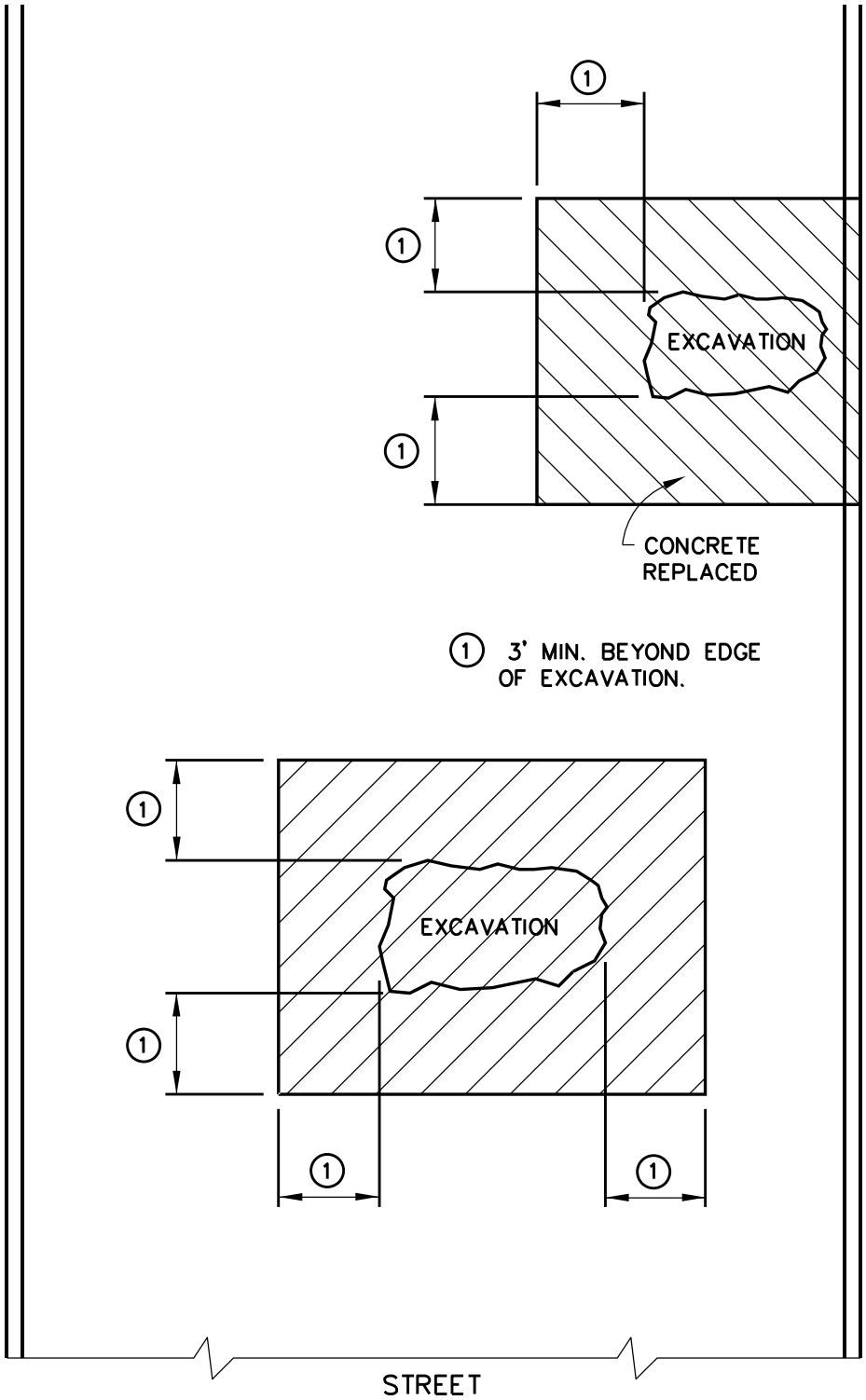

1/1

Revision Date:

Scale : N/A Date : 06/01/05	GARLAND ENGINEERING STANDARD DETAILS	TYPICAL CONCRETE STREET REMOVAL/REPLACEMENT	PAGE 5
Design :			
Drawn : JMK			
Dwg. File : REM_005.DWG			
Project No. : STANDARD-DETAILS			

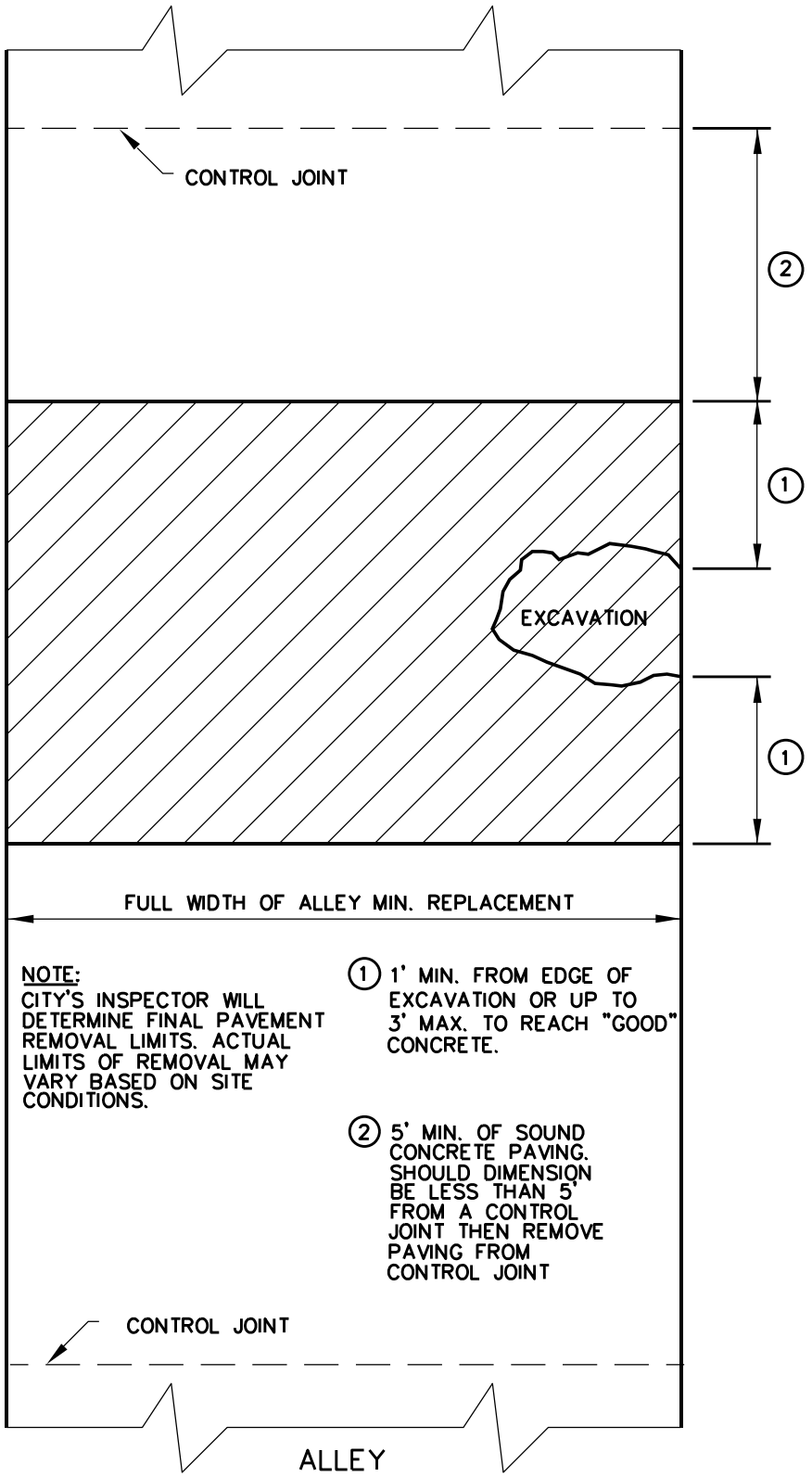

NOTE:
CITY'S INSPECTOR WILL DETERMINE FINAL PAVEMENT REMOVAL LIMITS. ACTUAL LIMITS OF REMOVAL MAY VARY BASED ON SITE CONDITIONS.

(1) 1' MIN. FROM EDGE OF EXCAVATION OR UP TO 3' MAX. TO REACH "GOOD" CONCRETE.

(2) 5' MIN. OF SOUND CONCRETE PAVING. SHOULD DIMENSION BE LESS THAN 5' FROM A CONTROL JOINT THEN REMOVE PAVING FROM CONTROL JOINT

1/1

Revision Date:

Scale : N/A Date : 06/01/05	GARLAND ENGINEERING STANDARD DETAILS	TYPICAL CONCRETE ALLEY REMOVAL/REPLACEMENT	PAGE 6
Design :			
Drawn : JMK			
Dwg. File : REM_006.DWG			
Project No. : STANDARD-DETAILS			